LASER LIGHTING
VIC PTY LTD

Nova 29

Pressed aluminium construction
Matte suede acrylic diffuser

RL90736 S | sA | PL 9 | 2x 9W | 240v

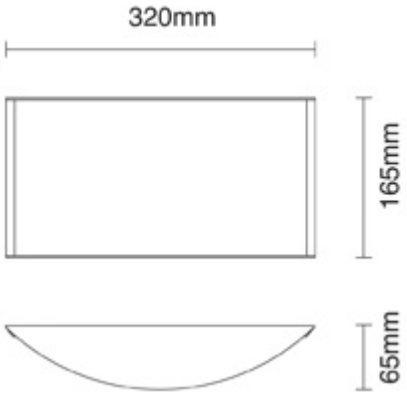

Nova 126

Pressed aluminium construction
Matte suede acrylic diffuser

RL90737 S | sA | PLC | 26W | 240v

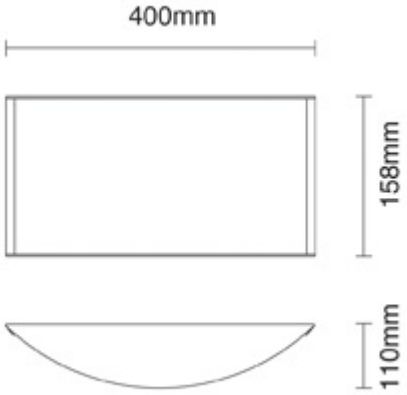

LASER LIGHTING
VIC PTY LTD

Nova 226

Pressed aluminium construction
Matte suede acrylic diffuser

RL90738 S sA PLC 2x 26W 240v

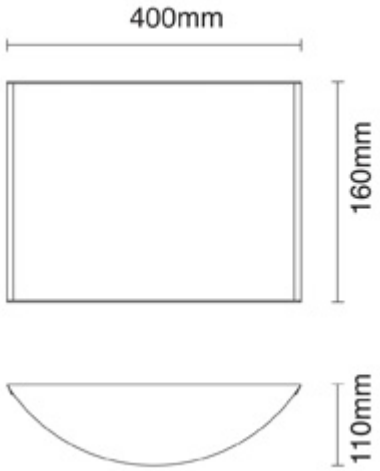

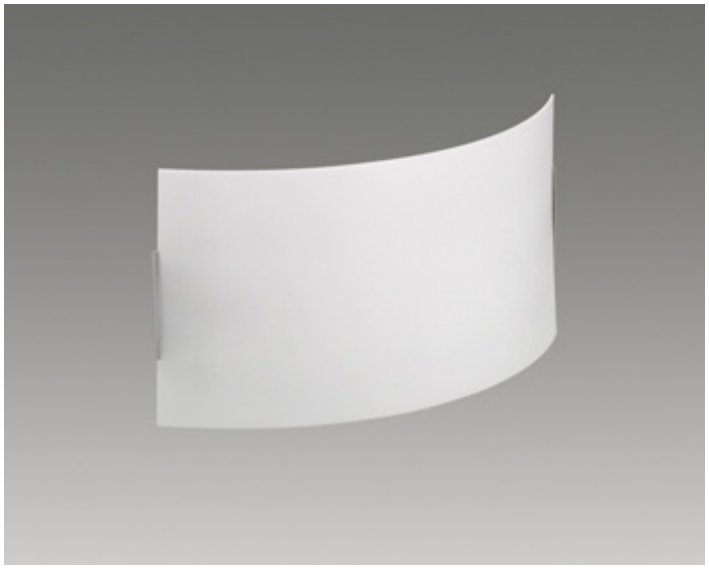

Nova S

Pressed aluminium construction
Matte suede acrylic diffuser
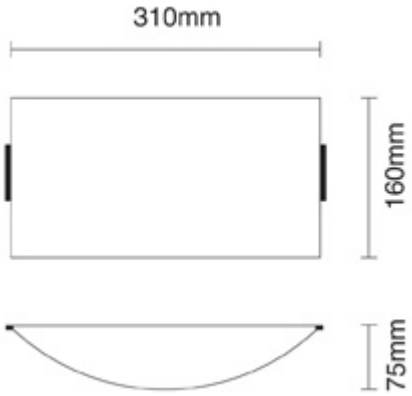
RL90739 S sA PL 9 9W 240v